TTV WAFER VALVE

20W3040E0

Wafer Butterfly Valve · DN32-200

Ref. W32200203040E0

Ductile Iron body, Stainless Steel disc and EPDM seat. Supplied with a bare shaft and top flange for a gearbox or actuator.

- Face to face EN 558 Series 20
- Pressure tested to EN 12266-1, ISO 5208
- Tightness ISO 5208, zero leakage API 598
- ISO 5752 Connection F5/F7 / F7
- Mounts between PN10/16 flanges



32-200 mm	PN10-16 · ANSI 150	-20...+110 °C	EPDM
NOMINAL SIZE (DN)	PRESSURE RATING	TEMPERATURE RANGE	SEAT MATERIAL

Construction.

MATERIALS OF CONSTRUCTION

BODY	SHAFT	DISC	SEAT
Ductile Iron	**Stainless Steel**	**Stainless Steel**	**EPDM**
EN 1563 - GJS500-7	ASTM A182 F304	ASTM A351 CF 8M	

MOUNTING BETWEEN FLANGES
PN10/16 · ISO 7005, DIN 2501, EN 1092-1 · ANSI class 150: ANSI B16.5

FACE TO FACE
EN 558 Series 20 · ISO 5752 Series 20 · API 609 Table 1 · BS 5155 Series 4

PRESSURE TEST
EN 12266-1, ISO 5208: Body: 1.5×PN · Seat: 1.1×PN

TIGHTNESS TEST
ISO 5208, zero leakage API 598

TEMPERATURE
-20ºC up to +110ºC

TECHNICAL DATA

Dimensions & standards.

Wafer DN32-200 | PN10-16 & ANSI 150
Valve with bare shaft

Model shown on source sheet: 20W3040 EPDM. Source: TTV datasheet ref. W32200203040E0, revision 0 (21-10-2020).

DIMENSIONAL DRAWING

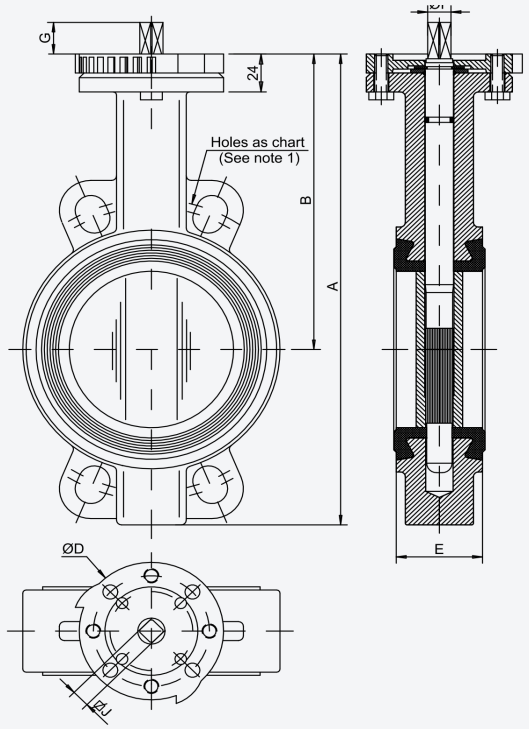

STANDARDS & RATINGS

Temperature
-20°C up to +110°C

Tolerances
ISO 2768-M

Face to Face
EN 558 Series 20
ISO 5752 Series 20
API 609 Table 1
BS 5155 Series 4

Pressure test according to
EN 12266-1, ISO 5208:
Body: 1.5×PN
Seat: 1.1×PN

Mounting between flanges
PN10/16
ISO 7005, DIN 2501, EN 1092-1
ANSI class 150: ANSI B16.5

Tightness test
ISO 5208, zero leakage API 598

Dimensions.

20W3040E0 · DN32-200

DN		A	B	D	E	F	G	J	ISO 5752 Connection	Weight Kg
mm	inch									
32	1¼"	205	140	88	33	9.8	14	8	F5/F7	2
40	1½"	205	140	88	33	9.8	14	8	F5/F7	2
50	2"	228	156	88	43	9.8	14	8	F5/F7	3.5
65	2½"	248	161	88	46	12	16	9	F5/F7	4.5
80	3"	265	169	88	46	14	16	11	F5/F7	5
100	4"	298	187	88	52	14	20	11	F5/F7	6.5
125	5"	331	206	105	56	18	20	14	F7	8
150	6"	349	215	105	56	18	20	14	F7	9
200	8"	430	255	105	60	22	24	17	F7	15

(Note 1) Holes as PN10-16 & ANSI 150Lb

(Note) dimensions and standards may vary without announcement. Colours are orientative.

Data supplied by TTV and provided for reference only. Specifications may change without notice – please confirm details with Actuation Valve & Control before ordering.

Need this valve automated?
Talk to our UK team about gearboxes, actuators and complete actuated valve packages.
actuation.co.uk